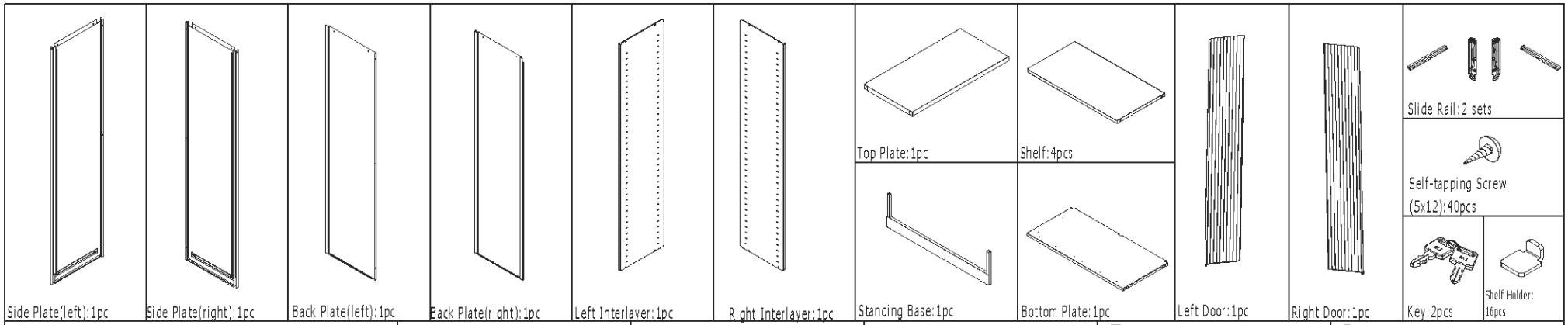

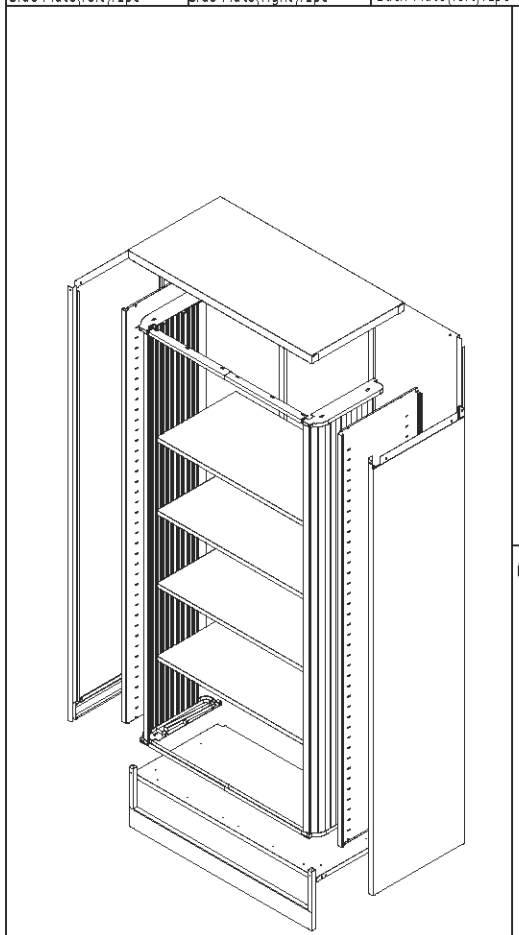
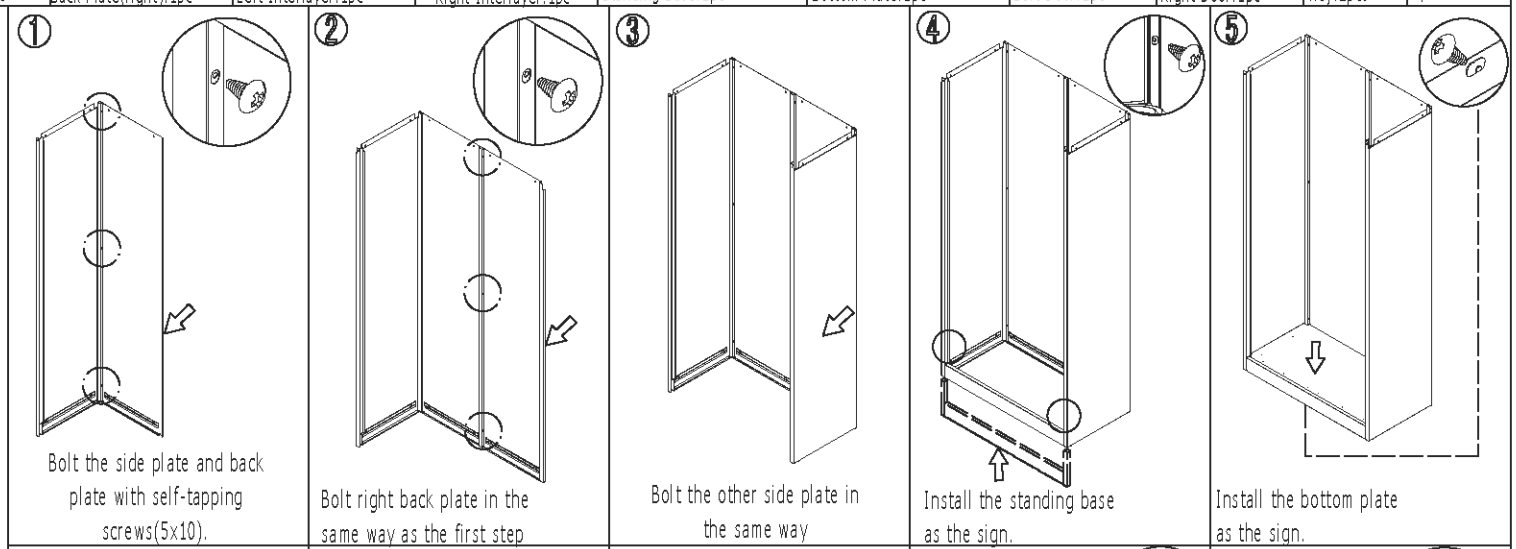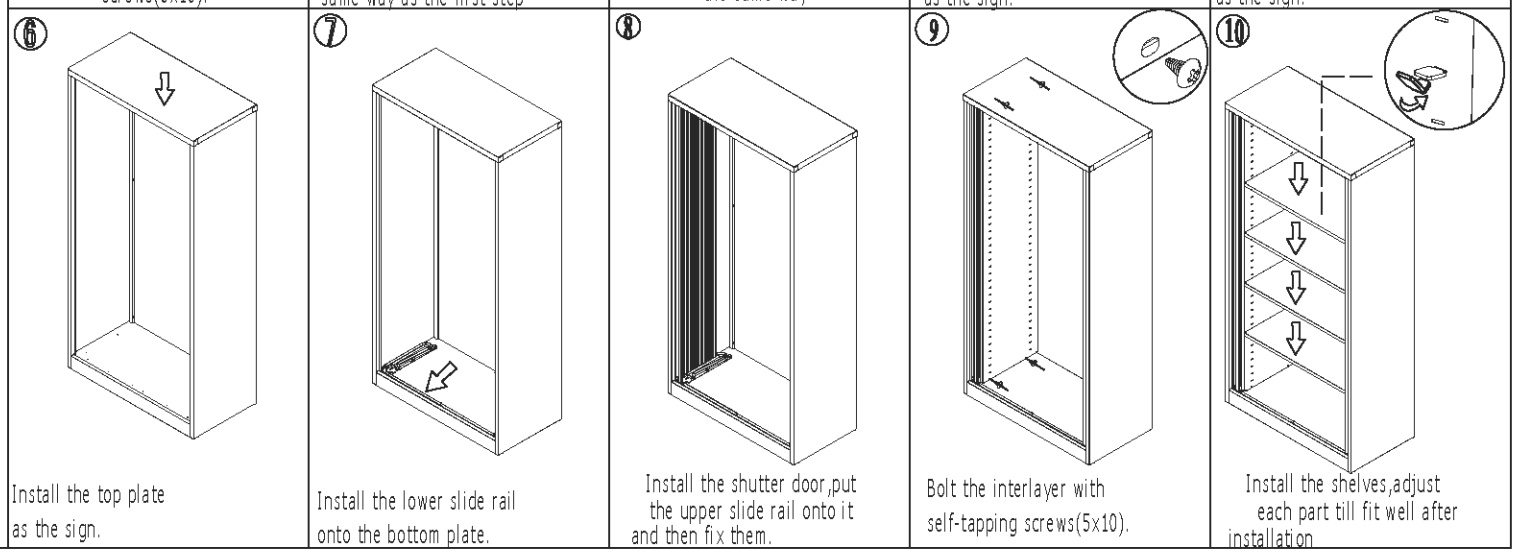
www.hefeng-furniture.com