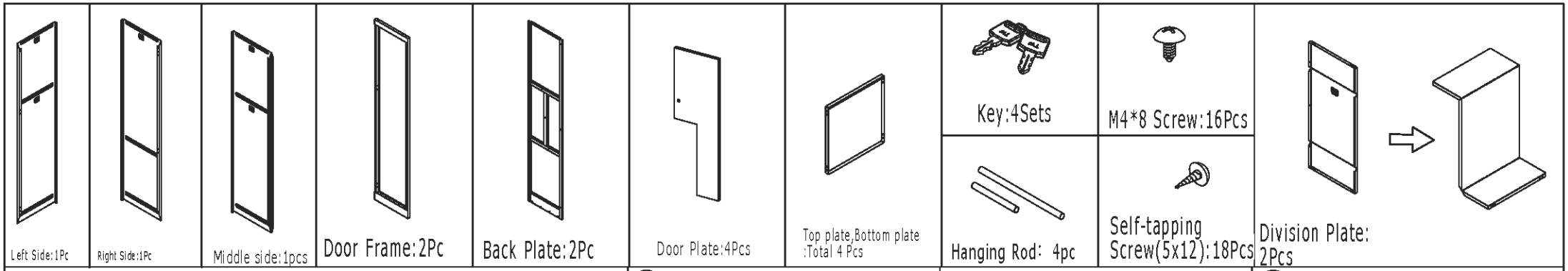
Left Side:1Pc
Right Side:1Pc
Middle side:1pcs
Door Frame:2Pc
Back Plate:2Pc
Door Plate:4Pcs
Top plate,Bottom plate
:Total 4 Pcs
Key:4Sets
M4*8 Screw:16Pcs
Hanging Rod: 4pc
Self-tapping
Screw(5x12):18Pcs
Division Plate:
2Pcs

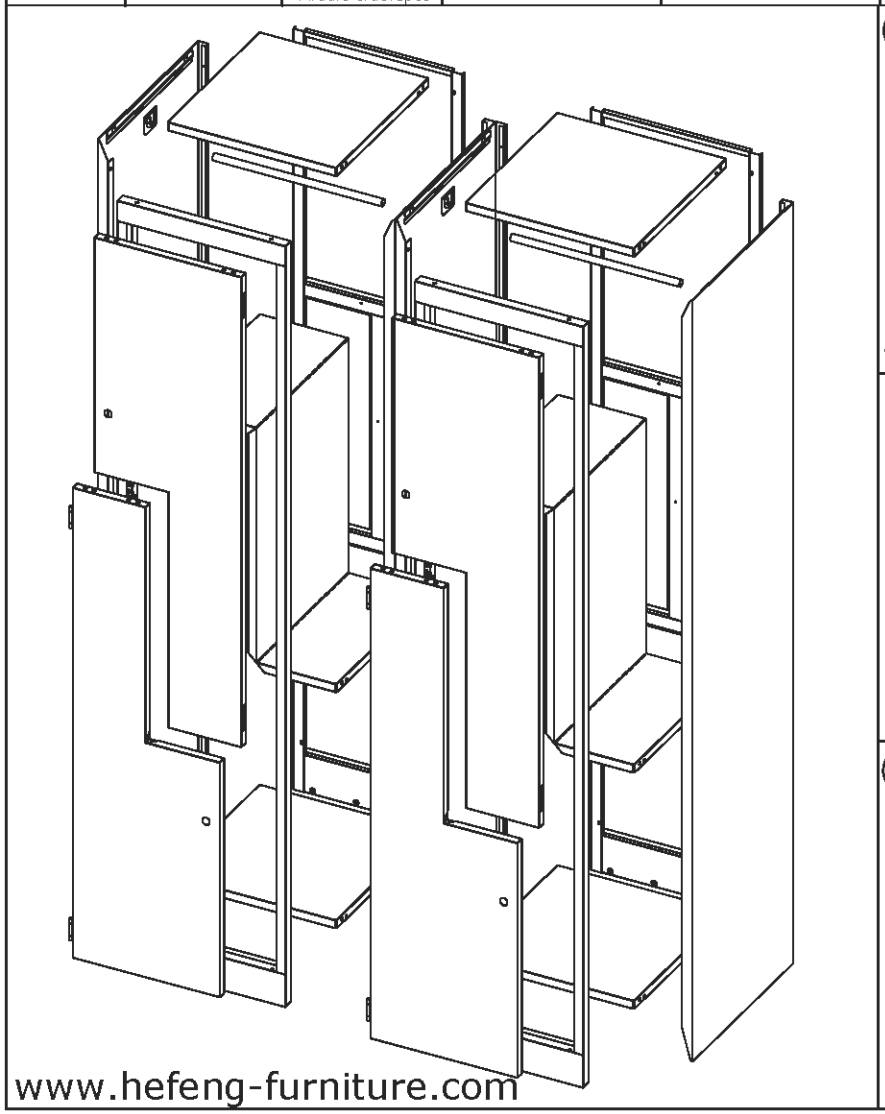
www.hefeng-furniture.com

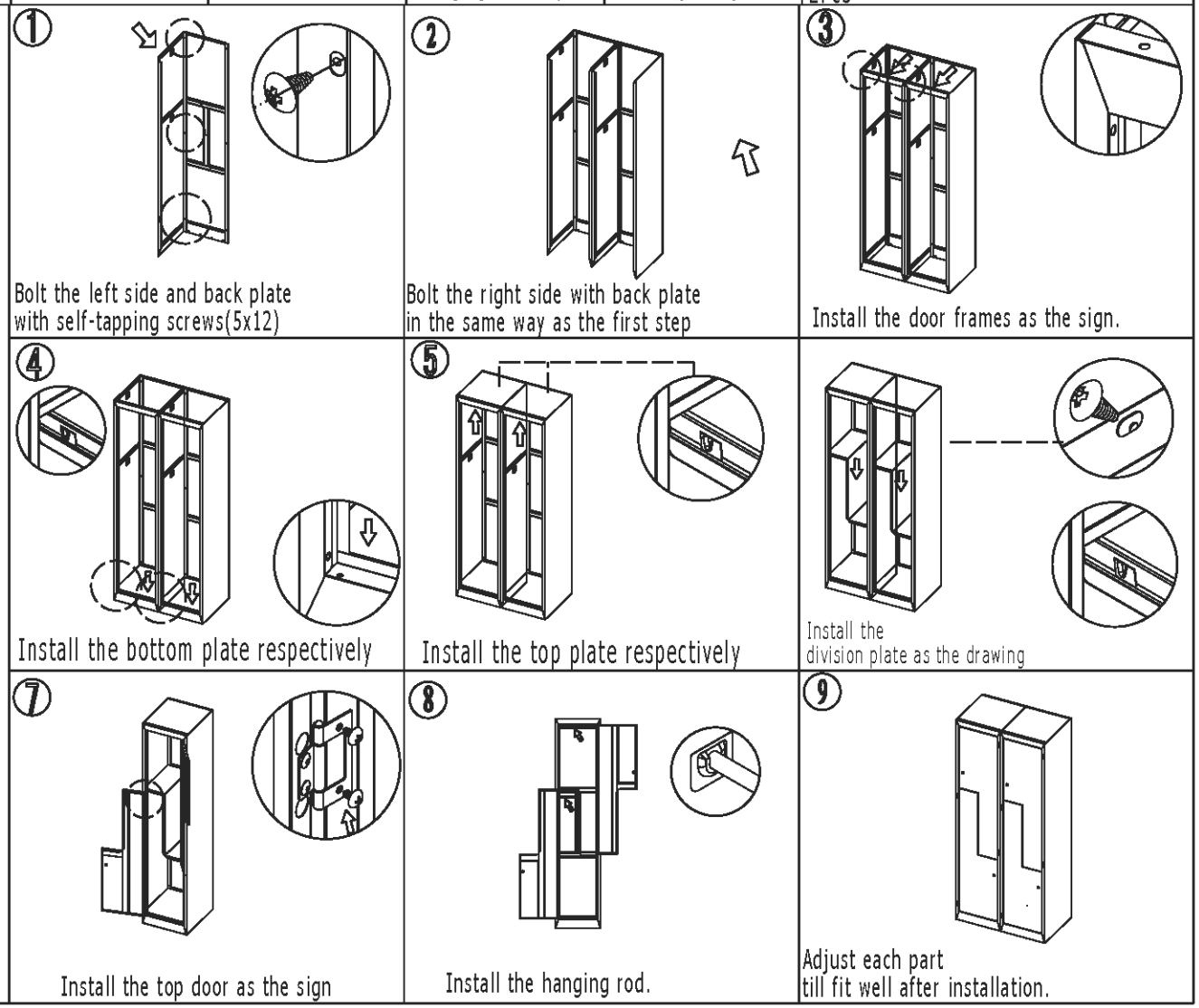
1
Bolt the left side and back plate
with self-tapping screws(5x12)
2
Bolt the right side with back plate
in the same way as the first step
3
Install the door frames as the sign.
4
Install the bottom plate respectively
5
Install the top plate respectively
Install the
division plate as the drawing
7
Install the top door as the sign
8
Install the hanging rod.
9
Adjust each part
till fit well after installation.